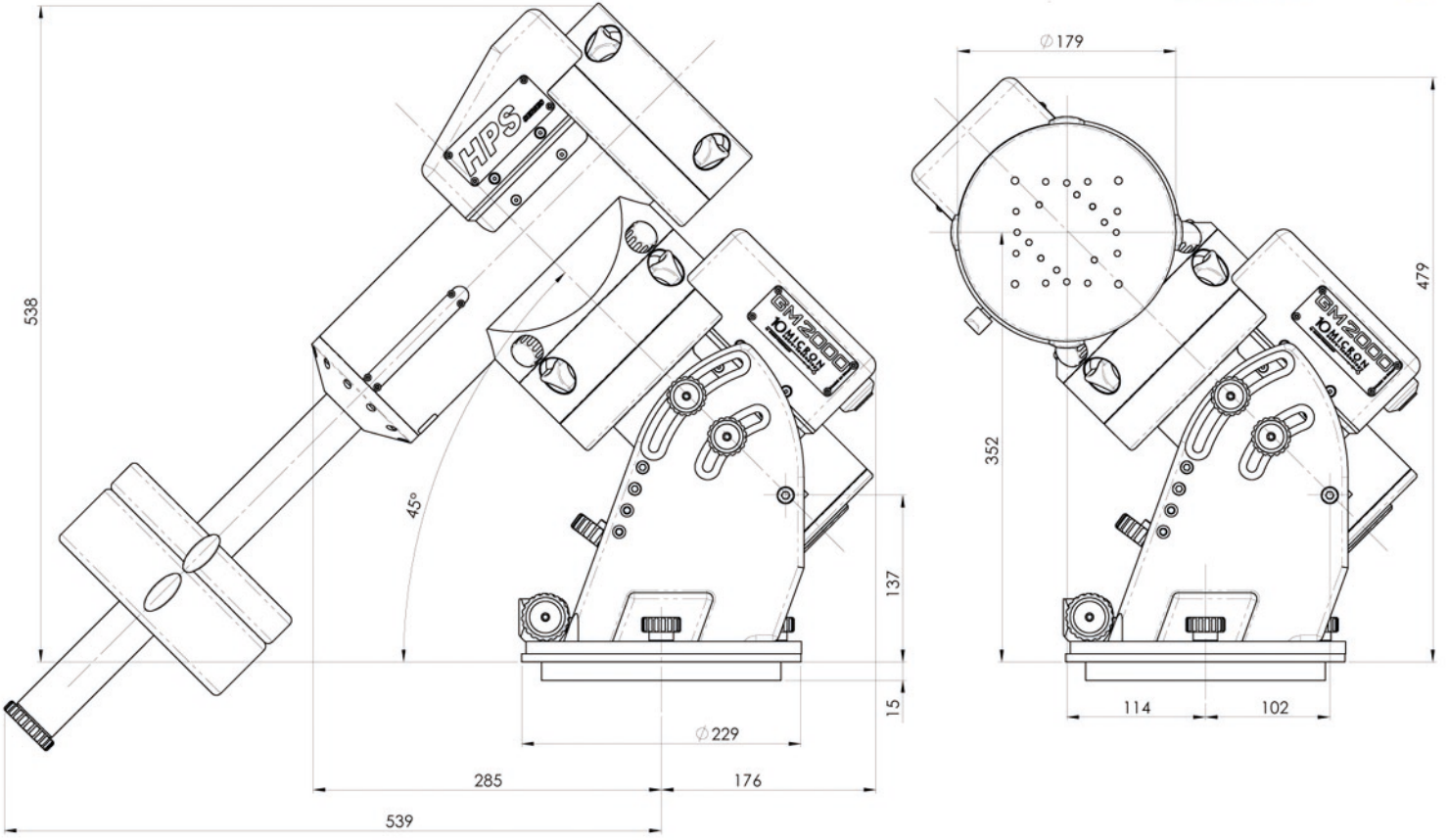GM2000 HPS II ULTRAPORT: sizes in mm